BLAUPUNKT

BLAUPUNKT Brand established 1924 GERMANY

ACTIVE SUBWOOFER
XLf 150 A

Enjoy it.

Operating and Installation Instructions

INTRODUCTION

Proper system planning is vital in order to maximize the device's performance and road safety. Plan your installation carefully to avoid compromising performance reliability of the system. Consult an authorized Blaupunkt dealer for installation or reparation. Read the manual carefully before operating the device for the first time.

Safety Notes

Ensure to follow below safety notes during installation and wiring connection : -

- Disconnect the negative terminal of the battery. Refer to the safety notes of vehicle manufacturer.
- Ensure positions of the holes are nowhere near the vehicle component to avoid any damage during drilling.
- Ensure cross section of the cable is no less than 2.5mm^2 if the positive and negative cables are too long.
- Incorrect installation may result in malfunction of the device or the car sound system.

Installation and Connection Instructions

- Select a dry and well-ventilated location to install the device.
- The device must not be installed on the rear shelf, rear seats or exposed locations.
- The installation location must be suitable for screw holes and have stable ground support.

Intergrated Fuse

- The integrated fuse in the device protects the output voltage and the entire electrical system in case of malfunction. Do not replace damaged fuse with higher current.

Switching On/Off

- This device will automatically turn on if audio signal is detected. The device will also automatically turn off if audio signal is received.

Voltage Supply

- Use the supplied power extension cable to connect to the positive battery terminal.
- Firmly and carefully connect the ground lead to a bare metal point on the vehicle chassis.
- The control of the device should be a two-channel control, either via the preamplifier output of the car sound system.
- A control solely via the right or left channel is also possible since the low-frequency portion of the music is generally identical on both channels.

Remote Control

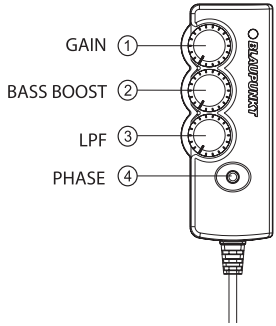

Disclaimer

- In no event shall Blaupunkt be liable for any direct, indirect, punitive, incidental, special consequential damages, to property or life, improper storage, whatsoever arising out of or connected with the use or misuse of our products.

- USA & CANADA : Product not intended for sale in the United States and Canada. If purchased in the U.S. or Canada, this product is purchased as-is. No warranty, express or implied is provided in the U.S. and Canada.

Recycling and Disposal

Do not dispose of your old unit in the household trash!
Use the return and collection systems available to dispose of the old device.

This manual may be updated from time to time without any notice.

WIRING DIAGRAM

Use the supplied cable and wire harness to connect the outputs correctly by referring to Diagram 1 & Diagram 2.

Diagram 1 (High Level Input- Speaker Input)

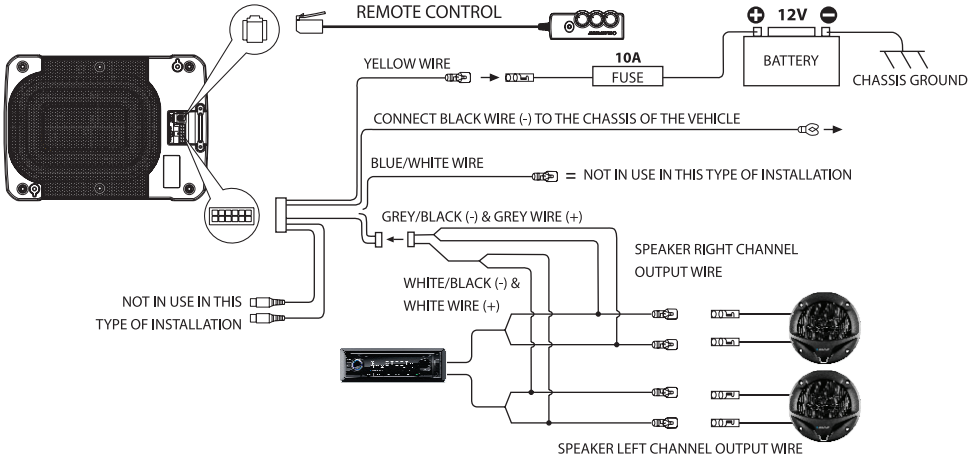

Diagram 2 (Low Level Input - RCA Input)

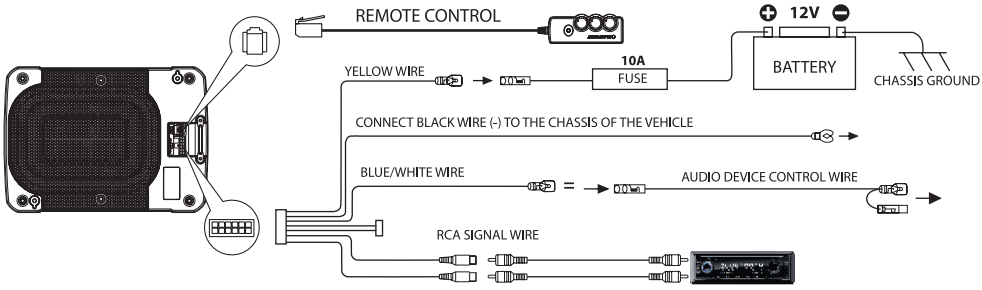

FUNCTION

Specifications

Subwoofer

- Speaker Size : 6″ x 8″
- Cone Composition : Aluminium
- Magnet Type : Ferrite
- Enclosure Housing Material : Aluminum
- Enclosure Dimension (L x W x H) : 294x210x72mm

Amplifier

- Amplifier technology : AB
- Normal output power (RMS) : 150 Watt@14.4V
- Max output power : 330 Watts@ 14.4V
- Sensitivity : RCA input 0.4v, Speaker input1.0V
- THD : <0.4%
- Passive Radiator : N/A
- Variable Bass Boost : 0-12dB
- RCA Low Level Input : Yes

Accessories

- Remote Controller : Wired
- DC Cord : 5.0 m
- Screws (Parker-Type) : M4 x 20mm
- Bracket A : 2 pcs
- Overall Net Weight : 3.49kg
- Signal-to-noise ratio : >90dB
- Impedance : 4 ohms
- Frequency response : 20Hz-150Hz
- Low pass filter (LPF) : 50Hz-100Hz
- Operating Voltage : 10V-16V
- Phase switch : 0° / 180°
- Automatic On/Off (Hi & Lo) : High Level
- Fuse Rating : 10A
- Gain : 0.2V - 5.5V

INSTALLATION POSITION

SIDE FIRING POSITION

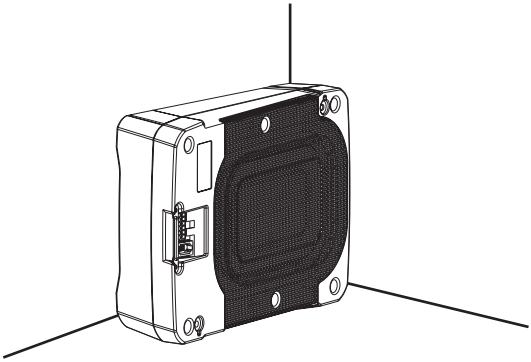

UP FIRING POSITION

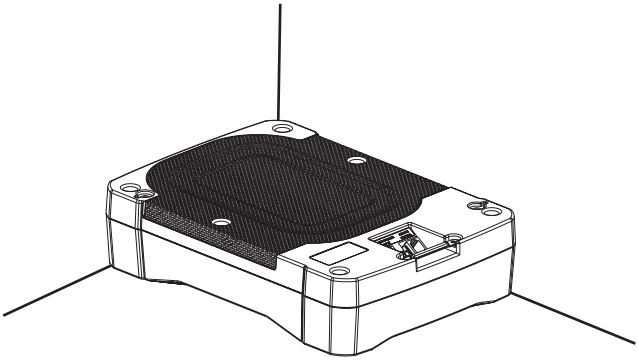

TROUBLESHOOTING

If any of the following problem occur, please resort to Troubleshooting for the possible solutions. Consult Blaupunkt authorized dealer if problem persist.

Problems	**Solutions**
Amplifier power up failure	Examine if the ground connection is intact.
	Examine if remote input has at least 5V DC.
	Ensure supplied voltage is minimum 12V.
	Examine if fuse is broken and replace if necessary.
	Restart the device if protection LED light is on.
Protection LED lights on when amplifier turn on	Examine speaker wire had short-circuit.
	Turn colume down from head unit to prevent overdriving the device.
	Device might need service or repair, if protection LED light is still on after resetting the device.
No sound output	Examine fuses and replace if necessary.
	Examine ground connection is intact.
	Examine if remote input has at least 5V DC.
	Examine if RCA audio cables are connected to the right inputs.
	Examine if speaker wiring is intact.
Low sound output	Reset Level Control.
	Examine the Crossover Control setting.
Buzzing noise	Observe if the device is still producing noise after turning on and off the amplifier. If yes, examine if the cables are correctly connected and if the cables and radio are in good condition. Repair or replace if the cables or the radio are not in good condition.
Squealing noise interference	Ensure RCA connections are properly connected.
Distorted sound output	Ensure input level of the device matches the signal level of the head unit.
	Always set the input level to the lowest.
	Examine if crossover frequency is set correctly.
	Examine if speaker wire had short-circuit.
Amplifier temperature increased	Examine the minimum speaker impedance for the amp models is correct.
	Ensure good air ventilation around the device. Add external cooling fan if necessary.
Engine noise (static sound) interference	Usually caused by poor RCA cable quality, which release noise. Use only the best quality cables, and route them away from power cables.
Engine noise (alternator whine) interference	Examine if RCA cable are nowhere near or attached to the vehicle chassis.
	Examine if head unit is properly connected to the wires.

Blaupunkt Car Entertainment - Asia Pacific Competence Centre

1 113 18 008 02 02